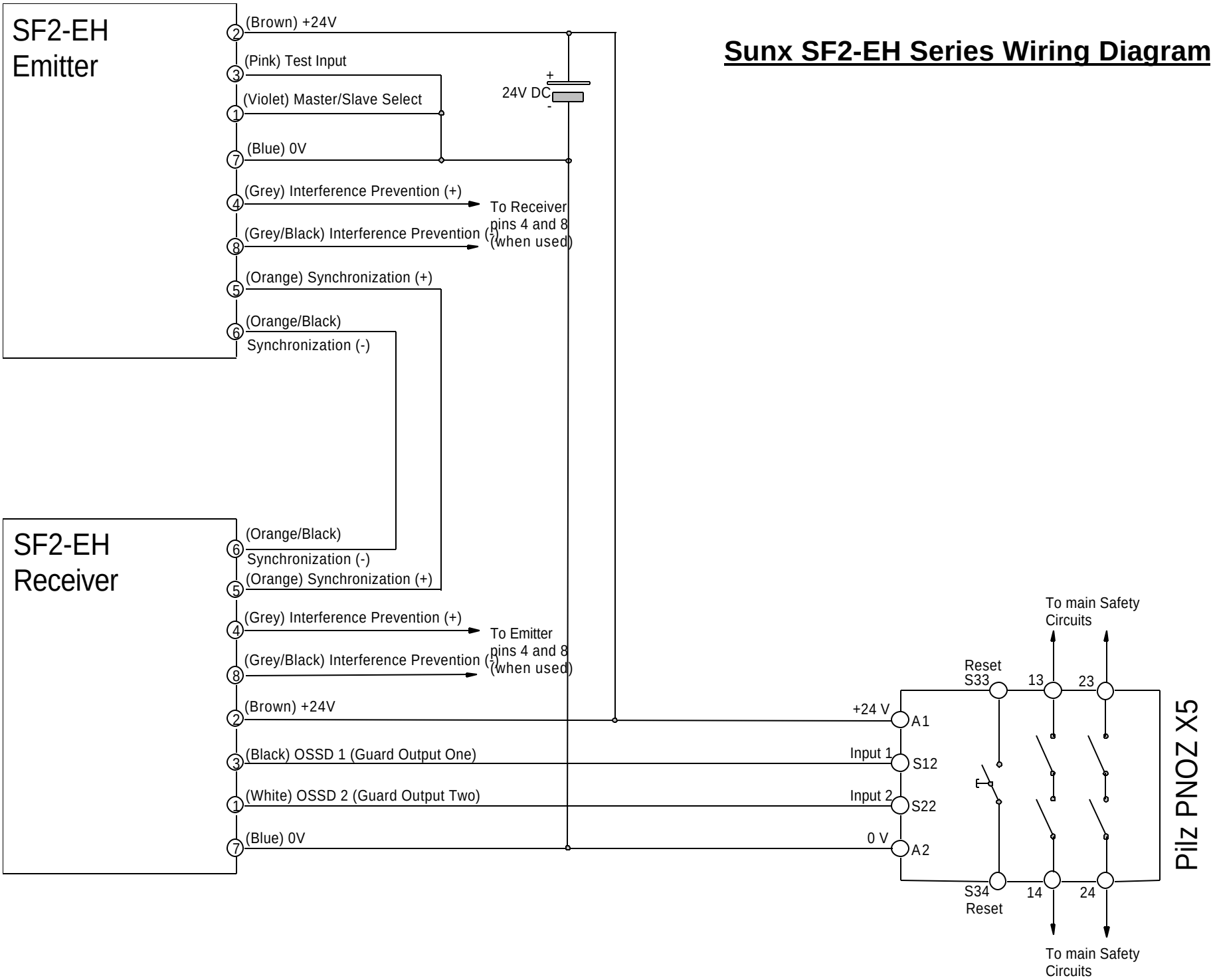Sunx SF2-EH Series Wiring Diagram